Overview

HP EliteBook 840 14 inch G11 Notebook PC



Front

1. ACS & ALS
2. Internal Microphone (2)
3. Webcam LED
4. Webcam
5. Camera Shutter
6. Touchpad

Overview

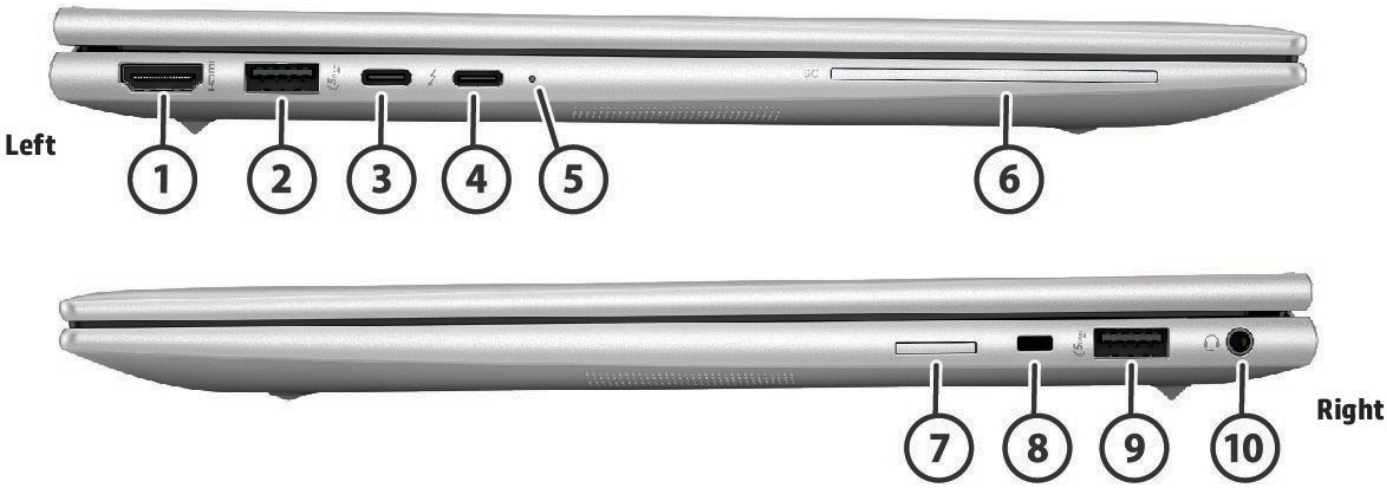

Sides

1. HDMI 2.1
2. Super Speed USB Type-A® 5Gbps Power charging
3. Thunderbolt™ 4 USB4™ Type-C® 40 Gbps USB Power Delivery DisplayPort™ 2.1
4. Thunderbolt™ 4 USB4™ Type-C® 40 Gbps USB Power Delivery DisplayPort™ 2.1
5. Power Indicator LED
6. Smart Card Reader (Optional)
7. Nano SIM card slot (Integrated)
8. Security lock slot (Integrated)
9. Super Speed USB Type-A® 5Gbps Power charging
10. Headphone/mic combo jack

1. SuperSpeed USB 20Gbps is not available with Thunderbolt™ 4.

Technical Specifications

PRODUCT NAME

HP EliteBook 840 14 inch G11 Notebook PC

OPERATING SYSTEMS

Preinstalled

Windows 11 Home - HP recommends Windows 11 Pro for business [1]
Windows 11 Home Single Language - HP recommends Windows 11 Pro for business [1]
Windows 11 Pro (Windows 11 Enterprise or Windows 10 Enterprise available with a Volume Licensing Agreement) [1]
Windows 11 Pro [1]
Windows 11 Pro Education [1]
FreeDOS

1. Not all features are available in all editions or versions of Windows. Systems may require upgraded and/or separately purchased hardware, drivers, software or BIOS update to take full advantage of Windows functionality. Windows is automatically updated and enabled. High speed internet and Microsoft account required. ISP fees may apply and additional requirements may apply over time for updates. See http://www.windows.com.

PROCESSORS

Processor 2,3,4,5,6	Cores	Number of P-cores	Number of E-cores	Number Of LP E-core	Threads	L3 Cache	Max Turbo Frequency 4		Intel SIPP/ vPro® Enterprise
							P-cores	E-cores	
Intel® Core™ Ultra7 165H	16 cores	6	8	2	22	24 MB	5.00 GHz	3.80 GHz	X
Intel® Core™ Ultra7 155H	16 cores	6	8	2	22	24 MB	4.80 Ghz	3.80 GHz	
Intel® Core™ Ultra5 135H	14 cores	4	8	2	18	18 MB	4.60 GHz	3.60 GHz	X
Intel® Core™ Ultra5 125H	14 cores	4	8	2	18	18 MB	4.50 GHz	3.60 GHz	
Intel® Core™ Ultra7 165U	12 cores	2	8	2	14	12 MB	4.90 GHz	3.80 GHz	X

Technical Specifications

Intel® Core™ Ultra7 155U	12 cores	2	8	2	14	12 MB	4.80 GHz	3.80 GHz	
Intel® Core™ Ultra5 135U	12 cores	2	8	2	14	12 MB	4.40 Ghz	3.60 GHz	X
Intel® Core™ Ultra5 125U	12 cores	2	8	2	14	12 MB	4.30 Ghz	3.60 GHz	

Processor Family

Intel® Core™ Ultra7 processor

Intel® Core™ Ultra5 processor

2. Multicore is designed to improve performance of certain software products. Not all customers or software applications will necessarily benefit from use of this technology. Performance and clock frequency will vary depending on application workload and your hardware and software configurations. Intel's numbering, branding and/or naming is not a measurement of higher performance.

3. Processor speed denotes maximum performance mode; processors will run at lower speeds in battery optimization mode.

4. Intel® Turbo Boost performance varies depending on hardware, software and overall system configuration. See www.intel.com/technology/turboboost for more information.

5. In accordance with Microsoft's support policy, HP does not support the Windows 8 or Windows 7 operating system on products configured with Intel and AMD 7th generation and forward processors or provide any Windows 8 or Windows 7 drivers on http://www.support.hp.com.

6. Intel vPro® requires Windows 10 Pro 64 bit or higher, a vPro supported processor, vPro enabled chipset, vPro enabled wired LAN and/or Wi-Fi 6E WLAN and TPM 2.0. Some functionality requires additional 3rd party software in order to run. Features of vPro® Essentials and Enterprise vary. See http://intel.com/vpro

GRAPHICS

Integrated

Intel® ARC Graphics [7]

Intel® Graphics

Supports

UMA: Support HDMI 2.1 [8]

Technical Specifications

Codec

Hardware Acceleration HEVC (H.265) CODEC is supported.

7. Intel® Arc™ graphics only available on select Intel® Core™ Ultra H-series processor-powered systems with at least 16GB of system memory in dual channel configuration.
8. HDMI cable sold separately

DISPLAY

Non-Touch

35.6 cm (14") diagonal, WUXGA (1920 x 1200), Bent, LCD, UWVA, anti-glare, + Low Blue Light, 800 nits, sRGB 100%, HP Sure View 5 integrated privacy screen [9,10,11,12]

35.6 cm (14") diagonal, WQXGA (2560 x 1600), Bent, LCD, 120Hz, UWVA, anti-glare, WLED, 500 nits, DCI-P3 100% [9,10,12]

35.6 cm (14") diagonal, WUXGA (1920 x 1200), Bent, LCD, UWVA, anti-glare, WLED + Low Blue Light, 400 nits, low power, sRGB 100% [9,10,12]

35.6 cm (14") diagonal, WUXGA (1920 x 1200), Bent, LCD, UWVA, anti-glare, WLED, 300 nits, NTSC 45% [9,10,12]

Touch

35.6 cm (14") diagonal, WUXGA (1920 x 1200), Bent, LCD, UWVA, anti-glare, + Low Blue Light, 800 nits, sRGB 100%, HP Sure View 5 integrated privacy screen[9,10,12]

35.6 cm (14") diagonal, WUXGA (1920 x 1200), Bent, LCD, touch, anti-glare, WLED, 300 nits, NTSC 45% [9,10,12]

Display Size (Diagonal)

35.6 cm

14"

Screen to Body Ratio

88.00%

Aspect Ratio

16.10

Max Hinge Open Angle

172±3°

Technical Specifications

9. HD content required to view HD images.
10. Resolutions are dependent upon monitor capability, and resolution and color depth settings.
11. HP Sure View Reflect integrated privacy screen is an optional feature that must be configured at purchase and is designed to function in landscape orientation.
12. Actual brightness will be lower with touchscreen or HP Sure View.

DOCKING (Sold Separately)

Docking station model #1	HP Thunderbolt 4 100W G6 Dock
Docking station model #2	HP USB-C Dock G5
Docking station model #3	HP Thunderbolt 120W G4 Dock
Docking station model #4	HP USB-C G5 Essential Dock
Docking station model #5	HP USB-C/A Universal Dock G2

For additional aftermarket options and docking specs please see page 43.

Technical Specifications

STORAGE AND DRIVES

Primary Storage

2 TB PCIe® Gen4x4 NVMe™ SSD Three Layer Cell [13]

1 TB PCIe® Gen4x4 NVMe™ SSD Three Layer Cell [13]

1 TB PCIe® NVMe™ SSD Value [13]

512 GB PCIe® Gen4x4 NVMe™ Self Encrypted OPAL2 SSD Three Layer Cell [13]

512 GB PCIe® Gen4x4 NVMe™ SSD Three Layer Cell [13]

512 GB PCIe® NVMe™ SSD Value [13]

256 GB PCIe® NVMe™ Self Encrypted OPAL2 SSD Value [13]

256 GB PCIe® NVMe™ SSD Value [13]

13. For storage drives, GB = 1 billion bytes. TB = 1 trillion bytes. Actual formatted capacity is less. Up to 30 GB (for Windows 10 and 11) is reserved for system recovery software.

MEMORY

Maximum Memory

64GB DDR5-5600 MT/s (2 x 32 GB) RAM [14]

Memory

64GB DDR5-5600 MT/s (2 x 32 GB) RAM [14]

32GB DDR5-5600 MT/s (2 x 16 GB) RAM [14]

32GB DDR5-5600 MT/s (1 x 32 GB) RAM [14]

16GB DDR5-5600 MT/s (2 x 8 GB) RAM [14]

16GB DDR5-5600 MT/s (1 x 16 GB) RAM [14]

8GB DDR5-5600 MT/s (1 x 8 GB) RAM [14]

Memory Slots

2 SODIMM

System runs at 5600 MT/s

14. Due to the non-industry standard nature of some third-party memory modules, we recommend HP branded memory to ensure compatibility. If you mix memory speeds, the system will perform at the lower memory speed.

Technical Specifications

NETWORKING/COMMUNICATIONS

WLAN

Intel® AX211 Wi-Fi 6E Bluetooth® 5.3 vPro Wireless Card [16]

Intel® AX211 Wi-Fi 6E Bluetooth® 5.3 WLAN Wireless Card [16]

WWAN

HP 5G Sub-6 Cat 19 WWAN eSIM [17,18]

HP 4G LTE-A Pro Cat16 WWAN eSIM [17]

LPWAN

Qualcomm® 9205 [19]

NFC

NFC NXP NPC300 [20]

Miracast

Native Miracast Support [21]

16. Wi-Fi 6E requires a Wi-Fi 6E router, sold separately to function in the 6GHz band. Availability of public wireless access points limited. Wi-Fi 6E is backwards compatible with prior 802.11 specs. And available in countries where Wi-Fi 6E is supported.
17. 4G LTE module is optional, must be configured at the factory, requires activation and separately purchased service contract. Check with service provider for coverage and availability in your area. Connection, upload and download speeds will vary due to network, location, environment, network conditions, and other factors. 4G LTE not available on all products, in all regions.
18. 5G module is optional and must be configured at the factory. Module designed for 5G NR NSA (non-standalone) networks as carriers deploy Evolved-Universal Terrestrial Radio Access New Radio Dual Connectivity (ENDC) with both 100Mhz of 5G NR and LTE channel bandwidth, using 256QAM 4x4 as defined by 3GPP. Module requires activation and separately purchased service contract. Check with service provider for coverage and availability in your area. Data connection, upload and download speeds will vary due to network, location, environment, network conditions, and other factors. Backwards compatible to 4G LTE and 3G HSPA technologies. 5G module planned to be available in select platforms and select countries, where carrier supported.
19. LPWAN (also called Mobile Narrowband) supports HP Protect & Trace with Wolf Connect service through the subscription term, but does not support mobile broadband use.
20. Sold separately or as an optional feature.
21. Miracast is a wireless technology your PC can use to project your screen to TVs, projectors, and streaming.

Technical Specifications

AUDIO/MULTIMEDIA

Audio

Audio by Poly Studio

2 Integrated stereo speakers

Discrete Amplifiers

2 Integrated dual array microphones

Bluetooth LE Audio support

Speaker Power

1W/8ohm Per speaker

Camera

5MP+Infrared camera [22]

5MP camera [22]

Sensors

Ambient Light Sensor

Adaptive Color Sensor

Hall Effect Sensor

Thermal Sensor

HP Tamper Lock [23]

HP Sure Platform

Fingerprint Sensor

22. Sold separately or as an optional feature.

23. HP Tamper Lock must be enabled by the customer or your administrator.

KEYBOARDS/POINTING DEVICES/BUTTONS & FUNCTION KEYS

Keyboard

HP Premium Keyboard, spill-resistant, Privacy, Backlit, Durakey keyboard.[24]

HP Premium Keyboard, spill-resistant, Backlit, Durakey keyboard. [24]

HP Premium Keyboard, spill-resistant, Durakey keyboard.

Pointing Device

Clickpad with multi-touch gesture support

Technical Specifications

Microsoft Precision Touchpad Default Gestures Support

Multi-touch gesture support

Function Keys

ESC - System information

F1 - Display Switching

F2 - Blank or Privacy

F3 - Brightness Down

F4 - Brightness Up

F5 - Audio Mute

F6 - Volume Down

F7 - Volume Up

F8 - Mic Mute

F9 - Blank or Backlit Toggle

F10 - Insert

F11 - Airplane Mode

F12 - HP Command Center

Power Button (with LED)

Delete

Home

End

Microsoft Copilot [25]

Hidden Function Keys

Fn+R – Break

Fn+S - Sys Rq

Fn+C - Scroll Lock

24. Backlit keyboard is an optional feature.

25. Requires Windows 11 and an NPU. Timing of feature delivery and availability varies by market and device. Requires Microsoft account to log in. See http://aka.ms/WindowsAIFeatures

SOFTWARE AND SECURITY

Software

Adobe Offer

Bing Search for IE11

Technical Specifications

Buy Microsoft Office (Sold separately)
HP Connection Optimizer
HP Easy Clean
HP Easy Clean Keyboard Driver
HP Hotkey Support
HP Mac Address Manager
HP Notifications
HP PC Hardware Diagnostics UEFI
HP PC Hardware Diagnostics Windows
HP Power Manager
HP Privacy Settings
HP Services Scan [26]
HP Support Assistant [27]
HSA Fusion for Commercial
Miro Offer [28]

Manageability Features

HP Client Catalog (download)
HP Client Management Script Library (download)
HP Cloud Recovery [29]
HP Connect for Microsoft Endpoint Manager [30]
HP Driver Packs (download)
HP Image Assistant (download)
HP Manageability Integration Kit (download) [31]
HP Patch Assistant (download) [32]

Security Features

HP Client Security Manager
Secured-Core PC Enable [33]
Windows Hello Enhanced Sign-In Security (ESS)
HP Wolf Security for Business which includes: [34]
HP Sure Admin [35]
HP Sure Click
HP Sure Recover [36]
HP Sure Run [37]
HP Sure Sense
HP Sure Start [38]

Technical Specifications

HP Tamper Lock

Security

TPM

Model: Nuvoton NPCT760HABYX

TCG TPM 2.0

Version: 7.2.3.1

FIPS 140-2 Compliant: Yes

Model: Infineon SLB9672VU2.0 FW15.23

TCG TPM 2.0

Version: 15.23

FIPS 140-2 Compliant: Yes

BIOS

Absolute Persistence Module [39]

BIOS Update via Network

HP BIOSphere [40]

HP DriveLock & Automatic DriveLock

HP Fingerprint Sensor [41]

HP Secure Erase [42]

HP Wake on WLAN

Battery Health Manager [43]

Smartcard Reader

Model number: Alcorlink AK9563

FIPS 201 Compliant: Yes

IPv6 Support

Yes

FirstNet Certified

TBD

Does the BIOS implement the ISO/IEC 19678:2015 (formerly NIST 800-147) guidelines?: Yes

UEFI version: 2.11

HP BIOS UEFI Specification Level version 2.11 supported with BIOS update

Technical Specifications

Class: 3

26 HP Services Scan is preinstalled and/or provided thru Windows Update and checks for service entitlement on each hardware device and downloads the HP Insights agent automatically. To disable this feature, please follow the instructions at http://www.hpdaas.com/requirements. The HP Insights agent is a telemetry and analytics platform that provides critical data around devices and applications and is not sold as a standalone service. Select HP Workforce Solutions require an HP Insights agent for Windows, Mac, & Android, available for download at https://admin.hp.com/software. For full system requirements and services that require the agent, please visit https://admin.hp.com/requirements. The agent collects telemetry and analytics around devices and applications that integrate into the Workforce Experience platform and is not sold as a standalone service. Internet access with connection to the Workforce Experience platform is required. HP follows stringent GDPR privacy regulations, and the platform is ISO27001, ISO27701, ISO27017 and SOC2 Type2 certified for Information Security. Not available in China.

27. HP Support Assistant is available on Windows. For more information, please visit http://www.support.hp.com/help/hp-support-assistant.

28. HP customers qualify for a 90 day trail of Miro, this offer ends September 2025. Complete terms and conditions are provided by Miro when accepting the offer.

29. HP Cloud Recovery is available for Z by HP, HP Elite and Pro desktops and laptops PCs with Intel® or AMD processors and requires an open, network connection. **NOTE:** You must back up important files, data, photos, videos, etc. before use to avoid loss of data. Details please refer to: https://support.hp.com/us-en/document/c05115630.

30. HP Connect for Microsoft Endpoint Manager is available from the Azure Market Place for HP Pro, Elite, Z and Point-of-Sale PCs managed with Microsoft Endpoint Manager. Subscription to Microsoft Endpoint Manager required and sold separately. Network connection required.

31. HP Manageability Integration Kit can be downloaded from http://www8.hp.com/us/en/ads/clientmanagement/overview.html.

32. HP Patch Assistant available on select HP PCs with the HP Manageability Kit that are managed through Microsoft System Center Configuration Manager. HP Manageability Integration Kit can be downloaded from http://www8.hp.com/us/en/ads/clientmanagement/overview.html.

33. Secured-Core PC Enable requires an Intel® vPro®, AMD Ryzen™ Pro processor or Qualcomm® processor with SD850 or higher and requires 8 GB or more system memory. Secured-core PC is enabled from the factory.

34. HP Wolf Security for Business requires Windows 10 or 11 Pro or higher, includes various HP security features and is available on HP Pro, Elite, RPOS and Workstation products. See product details for included security features.

35. HP Sure Admin requires HP G8 or newer platforms, Windows 10 or higher, HP BIOS, HP Manageability Kit or KMS Service from http://www.hp.com/go/clientmanagement and HP Sure Admin Local Access Authenticator smartphone app from the Android or Apple store

36. HP Sure Recover is available on select HP PCs and requires Windows 10 or 11 and an open network connection. You must back up important files, data, photos, videos, etc. before using HP Sure Recover to avoid loss of data.

37. HP Sure Run is available on select HP PCs and requires Windows 10 and higher.

Technical Specifications

38. HP Sure Start is available on select HP PCs and requires Windows 10 and higher.
39. Absolute firmware module is shipped turned off and can only be activated with the purchase a license subscription and full activation of the software agent. License subscriptions can be purchased for terms ranging multiple years. Service is limited, check with Absolute for availability outside the U.S. Certain conditions apply. For full details visit: https://www.absolute.com/about/legal/agreements/absolute/
40. HP BIOSphere features may vary depending on the platform and configuration.
41. HP Fingerprint Reader is an optional feature that requires Windows 10 or 11 and must be configured at purchase.
42. HP Secure Erase implements the methods outlined in the National Institute of Standards and Technology Special Publication 800-88r "Clear" sanitation method. HP Secure Erase does not support platforms with Intel® Optane™.
43. Depending on what version of HP Battery Health Manager (BHM) is available for your device, HP BHM may look at a number of factors to determine how to adjust battery charging over time to optimize battery health. HP BHM is preset to “Let HP Manage my Battery Charging” to allow the system to balance charging between battery health and battery duration. As Let HP Manage My Battery Charging adjusts charge capacity, the amount of run-time on battery will be reduced over time. HP may utilize BIOS updates to adjust BHM settings on select systems to optimize battery health and reduce exposure to those factors that can accelerate battery degradation. To update or change HP BHM settings and for complete details, see https://support.hp.com/us-en/document/ish_4449597-3519507-16

Technical Specifications

POWER

Power Supply

HP Standard 65W USB Type-C® adapter [44]

HP Slim 65W USB Type-C® adapter [44]

Battery

HP Long Life 3 cell 56Whr Polymer [45,46]

Compliant with UL 1642 Standard

Battery Recharge Time

Supports battery HP Fast Charge: approximately 50% in 30 minutes [47]

Power Cord

3-wire plug - 1m

Battery life

Up to 15 hours and 15 minutes with 56whr battery (HP Long Life 3-Cell, 56 Whr Polymer, UMA graphic, Intel Ultra 7 U15 vPro, Display set to 250 nits display (on a 400-nit display), 2*8G DDR5 memory, 256 GB SSD)

Up to 14 hours with 56whr battery (HP Long Life 3-Cell, 56 Whr Polymer, UMA graphic, Intel Ultra 7 H28 vPro, Display set to 250 nits display (on a 400-nit display), 2*8G DDR5 memory, 256 GB SSD) [48]

44. Availability may vary by country.

45. Battery is internal and not replaceable by customer. Serviceable by warranty.

46. Actual battery Watt-hours (Wh) will vary from design capacity. Battery capacity will naturally decrease with shelf life, time, usage, environment, temperature, system configuration, loaded apps, features, power management settings and other factors.

47. Recharges your battery up to 50% within 30 minutes when the system is off or in standby mode. Power adapter minimum of 65 watts required for battery capacities 56Whr or less. Power adapter minimum of 100 watts required for battery capacities greater than 56Whr and less than 83Whr. Power adapter minimum of 120 watts required for battery capacities greater than 83Whr and less than 100Whr. After charging has reached 50% capacity, charging will return to normal. Charging time may vary +/-10% due to System tolerance.

48. Mobile Mark 25 battery life will vary depending on various factors including product model, configuration, loaded applications, features, use, wireless functionality, and power management settings. The maximum capacity of the battery will naturally decrease with time and usage. See www.bapco.com for additional details.

Technical Specifications

WEIGHTS & DIMENSIONS

Product Weight

Starting at 1.418 kg (3.13 lb) with 56.00 Wh battery

Weight will vary by configuration. Does not include power adapter.

Product Dimensions (W x D x H) [49]

315.69 (W) x 224.41 (D) x 9.04 mm (front) / 16.35 mm (rear)

12.42 in x 8.83 in x 0.35 in (front) / 0.64 in (rear)

Maximum height 19.2mm / Maximum height 0.75 in

Pallet Dimensions (W x D x H)[50]

12" to 15" boxes (305mm height): 1200mm x 1000mm x 1080mm

49. Front height measurement is near the front edge where the chassis bottom cover taper begins. Back height measurement is near the back edge where the chassis bottom cover taper ends.

50. Product packaging size varies based on options chosen. Please contact your HP representative for your packaging size

details. For detailed packaging information, access the HP Commercial Notebooks Packaging Guide.

PORTS/SLOTS

Left side

2 Thunderbolt™ 4 with USB Type-C® 40Gbps signaling rate (USB Power Delivery, DisplayPort™ 2.1)[51]

1 Super Speed USB Type-A 5Gbps Power charging

1 HDMI 2.1 [8]

1 Smart Card Reader (Optional)

Right side

1 Super Speed USB Type-A 5Gbps Power charging

1 Headphone/mic combo jack

1 Nano SIM card slot (Integrated)

1 Security lock slot (Integrated)

51. SuperSpeed USB 20Gbps is not available with Thunderbolt™ 4.

8. HDMI cable sold separately.

USB SPECIFICATION AND MARKETING NAME MAPPING TABLE

Marketing Name	Technical Terminology
Hi-Speed USB 480Mbps signaling rate	USB 2.0
Super Speed USB 5Gbps signaling rate	USB 3.2 Gen 1
Super Speed USB 10Gbps signaling rate	USB 3.2 Gen 2
Super Speed USB 20Gbps signaling rate	USB 3.2 Gen 2x2

Technical Specifications

SERVICE AND SUPPORT

1-year warranty and 90 day software limited warranty options depending on country. Batteries have a default one year limited warranty except for HP Long Life batteries which will follow the one or three year warranty of the platform. Refer to http://www.hp.com/support/batterywarranty/ for additional battery information. On-site service and extended coverage is also available. HP Care Pack Services are optional extended service contracts that go beyond the standard limited warranties. To choose the right level of service for your HP product, use the HP Care Pack Services Lookup Tool at: http://www.hp.com/go/cpc. [52]

52. HP Care Packs are sold separately. Service levels and response times for HP Care Packs may vary depending on your geographic location. Service starts on date of hardware purchase. Restrictions and limitations apply. For details, visit http://www.hp.com/go/cpc. HP services are governed by the applicable HP terms and conditions of service provided or indicated to Customer at the time of purchase. Customer may have additional statutory rights according to applicable local laws, and such rights are not in any way affected by the HP terms and conditions of service or the HP Limited Warranty provided with your HP Product.

Technical Specifications

SYSTEM UNIT

Stand-Alone Power Requirements (AC Power)	
Nominal Operating Voltage	20.0V
Average Operating Power	W
Max Operating Power	UMA 65W
Temperature	
Operating	0° to 35° C (32° to 95° F)
Non-operating	-20° to 60° C (-4° to 140° F)
Relative Humidity	
Operating	10% to 90 % (non-condensing)
Non-operating	5% to 95 %, 38.7° C (101.6° F) maximum wet bulb temperature
Shock	
Operating	40 G, 2 ms, half-sine
Non-operating	240 G, 2 ms, half-sine
Random Vibration	
Operating	1.043 grams
Non-operating	3.500 grams
Altitude (unpressurized)	
Operating	3048 m (10000 ft)
Non-operating	12192 m (40000 ft)
Planned Industry Standard Certifications	
Regulatory Model Number	HSN-I45C-4
CSA/UL 62368-1	Yes
ENERGY STAR®	Yes [53]
EPEAT®	EPEAT® Gold in the United States[54]
FCC/ICES/CISPR/VCCI	Yes
CE MARKING	Yes
GS Mark	Yes
	Related commodity should comply with ISO 9241 Standards.
China CCC/SRRC	Yes
Taiwan BSMI/NCC	Yes
Korea KCC/KC/KES	Yes
Ukraine NSoC/TEC	Yes
EAEU Compliance	Yes
Saudi Arabian Compliance	Yes

Technical Specifications

TCO	Yes
WW RoHS	Yes
Low Blue Light	Yes
MIL-STD 810H Testing	Yes[55]

53. Configurations of the HP EliteBook 840 14 inch G11 Notebook PC that are ENERGY STAR® qualified are identified as HP EliteBook 840 14 inch G11 Notebook PC ENERGY STAR on HP websites and on http://www.energystar.gov.
54. Based on US EPEAT® registration according to IEEE 1680.1-2018 EPEAT®. EPEAT® status varies by country. Visit http://www.epeat.net for more information.
55. MIL STD 810H testing is not intended to demonstrate fitness for U.S. Department of Defense contract requirements or for military use. Test results are not a guarantee of future performance under these test conditions. Accidental damage requires an optional HP Accidental Damage Protection Care Pack.

DISPLAYS

1. Actual brightness will be lower with touchscreen or HP Sure View.

NOTE: All specifications represent the typical specifications provided by HP's component manufacturers; actual performance may vary either higher or lower.

14.0 in WUXGA (1920 x 1200) Anti-Glare UWVA LED NTSC 45 NB2X 300 eDP 1.2 w/o PSR bent LCD Panel	**Outline Dimensions (W x H)**	307.29x199.25(max)
	Active Area	301.59 X 188.50 (typ)
	Weight	300 (max)
	Diagonal Size	14
	Surface Treatment	Anti-Glare
	Touch Enabled	No
	Contrast Ratio	1000:1(typ)
	Refresh Rate	60 Hz
	Brightness	300 nits[1]
	Pixel Resolution - Format	1920 x 1200 (WUXGA)
	Backlight	WLED
	Pixel Resolution	RGB
	Color Gamut Coverage	NTSC 45%
	Color Depth	6+2 FRC
	Viewing Angle	UWVA 89/89/89/89
	Low Blue Light	No

Technical Specifications

	Power Consumption (W, EBL@ 150nits max/ 200nits max))	2.20 (max) / 2.70 (max)

14.0 in WUXGA (1920 x 1200) Anti-Glare UWVA LED NTSC 45 NB2X 300 TOP eDP 1.2 w/o PSR bent LCD Panel	**Outline Dimensions (W x H)**	307.29x199.25(max)
	Active Area	301.59 X 188.50 (typ)
	Weight	305g (max)
	Diagonal Size	14
	Surface Treatment	Anti-Glare
	Touch Enabled	Yes
	Contrast Ratio	1000:1(typ)
	Refresh Rate	60 Hz
	Brightness	300 nits[1]
	Pixel Resolution - Format	1920 x 1200 (WUXGA)
	Backlight	WLED
	Pixel Resolution	RGB
	Color Gamut Coverage	NTSC 45%
	Color Depth	6+2 FRC
	Viewing Angle	UWVA 89/89/89/89
	Low Blue Light	No
	Power Consumption (W, EBL@ 150nits max/ 200nits max))	2.15 (max)/2.65 (max)

14.0 in WUXGA (1920 x 1200) Anti-Glare UWVA WLED+LBL sRGB NB2X 400 eDP 1.4+PSR2 Low-Power 100 bent LCD Panel	**Outline Dimensions (W x H)**	307.590 x 199.550 (max)
	Active Area	301.590 x 188.500 (typ)
	Weight	210 (max)
	Diagonal Size	14
	Surface Treatment	Anti-Glare
	Touch Enabled	No
	Contrast Ratio	1000:1(typ)
	Refresh Rate	60 Hz

Technical Specifications

	Brightness	400 nits[1]
	Pixel Resolution - Format	1920 x 1200 (WUXGA)
	Backlight	WLED
	Pixel Resolution	RGB
	Color Gamut Coverage	sRGB 100%
	Color Depth	8
	Viewing Angle	UWVA 89/89/89/89
	Low Blue Light	Yes
	Power Consumption (W, EBL@ 150nits max/ 200nits max))	1.29 (max) / 1.66 (max)
14.0 in WQXGA (2560 x 1600) Anti-Glare UWVA LED DCI-P3 NB2X 500 eDP 1.4+PSR2 100 120Hz bent LCD Panel	**Outline Dimensions (W x H)**	307.594 x 199.546 (max)
	Active Area	301.594 x 188.496 (typ)
	Weight	230 (max)
	Diagonal Size	14
	Surface Treatment	Anti-Glare
	Touch Enabled	No
	Contrast Ratio	1200:1(typ)
	Refresh Rate	120 Hz
	Brightness	500 nits[1]
	Pixel Resolution - Format	2560 x1600 (WQXGA)
	Backlight	WLED
	Pixel Resolution	RGB
	Color Gamut Coverage	DCI-P3 100%
	Color Depth	8
	Viewing Angle	UWVA 89/89/89/89
	Low Blue Light	No
	Power Consumption (W, EBL@ 150nits max/ 200nits max))	2.88 (max) / 3.44 (max)

Technical Specifications

14.0 in WUXGA (1920 x 1200) Anti-Glare UWVA Low Blue Light sRGB 100 800 eDP 1.4+PSR+IOL Sure View 5 bent LCD Panel	**Outline Dimensions** (W x H)	306.890 x 197.900 (max)
	Active Area	301.590 X 188.500 (typ)
	Weight	260 (max)
	Diagonal Size	14
	Thickness	2.2/ 3.9 (max)
	Interface	eDP 1.4
	Surface Treatment	Anti-Glare
	Touch enabled	No
	Contrast Ratio	1500 : 1 (typ)
	Refresh Rate	60 (typ)
	Brightness	800 (typ)
	Pixel Resolution - Format	1920 x 1200 (WUXGA)
	Backlight	WLED
	Pixel Resolution	RGB
	Color Gamut Coverage	sRGB 100%
	Color Depth	8 bits
	Viewing Angle	UWVA 89/89/89/89
	Low Blue Light	Yes
	Power Consumption (W, EBL@ 150nits max/ 200nits max)	1.48 (max)/1.8(max)

14.0 in WUXGA (1920 x 1200) Anti-Glare UWVA Low Blue Light sRGB 100 TOP 800 eDP 1.4+PSR+IOL Sure View 5 bent LCD Panel	**Outline Dimensions** (W x H)	306.890 x 197.900 (max)
	Active Area	301.590 X 188.500 (typ)
	Weight	260 (max)
	Diagonal Size	14
	Thickness	2.4/ 4.2 (max)
	Interface	eDP 1.4
	Surface Treatment	Anti-Glare
	Touch enabled	Yes
	Contrast Ratio	1500 : 1 (typ)
	Refresh Rate	60 (typ)

Technical Specifications

Brightness	800 (typ)
Pixel Resolution - Format	1920 x 1200 (WUXGA)
Backlight	WLED
Pixel Resolution	RGB
Color Gamut Coverage	sRGB 100%
Color Depth	8 bits
Viewing Angle	UWVA 89/89/89/89
Low Blue Light	Yes
Power Consumption (W, EBL@ 150nits max/ 200nits max)	1.60 (max)/1.97(max)

Technical Specifications

STORAGE AND DRIVES

For storage drives, GB = 1 billion bytes. TB = 1 trillion bytes. Actual formatted capacity is less. Up to 30 GB (for Windows 10 and 11) is reserved for system recovery software.

SSD 512GB 2280 PCIe-4x4 NVMe Three Layer Cell	**Form Factor**	M.2 2280
	Capacity	512GB
	NAND Type	TLC
	Interface	PCIe NVMe Gen4X4
	Maximum Sequential Read	6400 MB/s ±20%
	Maximum Sequential Write	3500 MB/s ±20%
	Logical Blocks	1,000,215,215
	Features	Pyrite 2.0; TRIM; L1.2

SSD 1TB 2280 PCIe-4x4 NVMe Three Layer Cell	**Form Factor**	M.2 2280
	Capacity	1TB
	NAND Type	TLC
	Interface	PCIe NVMe Gen4X4
	Maximum Sequential Read	6400 MB/s ±20%
	Maximum Sequential Write	5000 MB/s ±20%
	Logical Blocks	2,000,409,264
	Features	Pyrite 2.0; TRIM; L1.2

SSD 2TB 2280 PCIe-4x4 NVMe Three Layer Cell	**Form Factor**	M.2 2280
	Capacity	2TB
	NAND Type	TLC
	Interface	PCIe NVMe Gen4X4
	Maximum Sequential Read	6400 MB/s ±20%
	Maximum Sequential Write	5000 MB/s ±20%
	Logical Blocks	4,000,797,360
	Features	Pyrite 2.0; TRIM; L1.2

256GB PCIe 2280 NVMe Self Encrypted	**Form Factor**	M.2 2280
	Capacity	256GB

Technical Specifications

OPAL2 Value Solid State Drive	**NAND Type**	TLC
	Interface	PCIe NVMe Gen4X4
	Maximum Sequential Read	2000 MB/s ±20%
	Maximum Sequential Write	900 MB/s ±20%
	Logical Blocks	500,118,192
	Features	TCG Opal 2.0; TRIM; L1.2

512GB PCIe-4x4 2280 NVME Self Encrypted OPAL2 Three Layer Cell Solid State Drive	**Form Factor**	M.2 2280
	Capacity	512GB
	NAND Type	TLC
	Interface	PCIe NVMe Gen4X4
	Maximum Sequential Read	6400 MB/s ±20%
	Maximum Sequential Write	3500 MB/s ±20%
	Logical Blocks	1,000,215,215
	Features	TCG Opal 2.0; TRIM; L1.2

SSD 256GB 2280 PCIe NVMe Value	**Form Factor**	M.2 2280
	Capacity	256 GB
	NAND Type	TLC
	Interface	PCIe NVMe Gen4X4
	Maximum Sequential Read	2000 MB/s ±20%
	Maximum Sequential Write	900 MB/s ±20%
	Logical Blocks	500,118,192
	Features	Pyrite 2.0; TRIM; L1.2

SSD 512GB 2280 PCIe NVMe Value	**Form Factor**	M.2 2280
	Capacity	512 GB
	NAND Type	TLC
	Interface	PCIe NVMe Gen4X4
	Maximum Sequential Read	2200 MB/s ±20%
	Maximum Sequential Write	1000 MB/s ±20%
	Logical Blocks	1,000,215,215
	Features	Pyrite 2.0; TRIM; L1.2

Technical Specifications

SSD 1TB 2280 PCIe NVMe Value	**Form Factor**	M.2 2280
	Capacity	1TB
	NAND Type	TLC
	Interface	PCIe NVMe Gen4X4
	Maximum Sequential Read	2200 MB/s ±20%
	Maximum Sequential Write	1600 MB/s ±20%
	Logical Blocks	2,000,409,264
	Features	Pyrite 2.0; TRIM; L1.2

Technical Specifications

NETWORKING/COMMUNICATIONS

Intel® AX211 Wi-Fi 6E +BT 5.3 M.2 160MHz CNVi World-wide WLAN vPro® Wireless Card[1]	**Wireless LAN Standards**	IEEE 802.11a IEEE 802.11b IEEE 802.11g IEEE 802.11n IEEE 802.11ac IEEE 802.11ax IEEE 802.11d IEEE 802.11e IEEE 802.11h IEEE 802.11i IEEE 802.11k IEEE 802.11r IEEE 802.11v
	Interoperability	Wi-Fi certified
	Frequency Band	▪802.11b/g/n/ax 2.402 - 2.482 GHz ▪802.11a/n/ac/ax 4.9 - 4.95 GHz (Japan) 5.15 - 5.25 GHz 5.25 - 5.35 GHz 5.47 - 5.725 GHz 5.825 - 5.850 GHz 5.955 - 6.415 GHz 6.435 - 6.515 GHz 6.535 - 6.875 GHz 6.895 - 7.115 GHz
	Data Rates	▪ 802.11b: 1, 2, 5.5, 11 Mbps ▪ 802.11g: 6, 9, 12, 18, 24, 36, 48, 54 Mbps ▪ 802.11a: 6, 9, 12, 18, 24, 36, 48, 54 Mbps ▪ 802.11n: max 300Mbps ▪ 802.11ac : 1733Mbps ▪ 802.11ax : max 2.4Gbps
	Modulation	Direct Sequence Spread Spectrum OFDM, BPSK, QPSK, CCK, 16-QAM, 64-QAM, 256-QAM

Technical Specifications

	, 1024QAM
Security[2]	▪ IEEE and WiFi compliant 64 / 128 bit WEP encryption for a/b/g mode only ▪ AES-CCMP: 128 bit in hardware ▪ 802.1x authentication ▪ WPA, WPA2: 802.1x. WPA-PSK, WPA2-PSK, TKIP, and AES. ▪ WPA2 certification ▪ WPA3 certification ▪ IEEE 802.11i ▪ WAPI
Network Architecture Models	Ad-hoc (Peer to Peer) Infrastructure (Access Point Required)
Roaming	IEEE 802.11 compliant roaming between access points
Output Power[3]	▪ 802.11b : +17dBm minimum ▪ 802.11g : +16dBm minimum ▪ 802.11a : +17dBm minimum ▪ 802.11n HT20(2.4GHz) : +14dBm minimum ▪ 802.11n HT40(2.4GHz) : +13dBm minimum ▪ 802.11n HT20(5GHz) : +14dBm minimum ▪ 802.11n HT40(5GHz) : +13dBm minimum ▪ 802.11ac VHT80(5GHz) : +10dBm minimum ▪ 802.11ac VHT160(5GHz) : +10dBm minimum ▪ 802.11ax HE40(2.4GHz) : +12dBm minimum ▪ 802.11ax HE80(5GHz) : +10dBm minimum ▪ 802.11ax HE160(5GHz) : +10dBm minimum
Power Consumption	▪ Transmit mode 2.0 W ▪ Receive mode 1.6 W ▪ Idle mode (PSP) 180 mW (WLAN Associated) ▪ Idle mode 50 mW (WLAN unassociated) ▪ Connected Standby 10mW ▪ Radio disabled 8 mW
Power Management	ACPI and PCI Express compliant power management 802.11 compliant power saving mode
Receiver Sensitivity[4]	▪ 802.11b, 1Mbps : -93.5dBm maximum ▪ 802.11b, 11Mbps : -84dBm maximum

Technical Specifications

		▪ 802.11a/g, 6Mbps : -86dBm maximum ▪ 802.11a/g, 54Mbps : -72dBm maximum ▪ 802.11n, MCS07 : -67dBm maximum ▪ 802.11n, MCS15 : -64dBm maximum ▪ 802.11ac, MCS0(VHT80) : -84dBm maximum ▪ 802.11ac, MCS9(VHT80) : -59dBm maximum ▪ 802.11ac, MCS9(VHT160) : -58.5dBm maximum ▪ 802.11ax, MCS11(HE40): -57dBm maximum ▪ 802.11ax, MCS11(HE80): -54dBm maximum ▪ 802.11ax, MCS11(HE160): -53.5dBm maximum
Antenna type		High efficiency antenna with spatial diversity Two embedded tri-band 2.4/5/6 GHz antennas are provided to the card to support WLAN MIMO communications and Bluetooth communications
Form Factor		PCI-Express M.2 MiniCard
Dimensions		Type 2230 : 2.3 x 22.0 x 30.0 mm
Weight		Type 2230 : 2.8g
Operating Voltage		3.3v +/- 9%
Temperature	**Operating**	14° to 158° F (-10° to 70° C)
	Non-operating	-40° to 176° F (-40° to 80° C)
Humidity	**Operating**	10% to 90% (non-condensing)
	Non-operating	5% to 95% (non-condensing)
Altitude	**Operating**	0 to 10,000 ft (3,048 m)
	Non-operating	0 to 50,000 ft (15,240 m)
LED Activity		LED Amber - Radio OFF; LED OFF - Radio ON

HP Integrated Module with Bluetooth 4.0/4.1/4.2/5.0/5.1/5.2/5.3 Wireless Card Technology

Bluetooth Specification	4.0/4.1/4.2/5.0/5.1/5.2/5.3 Compliant
Frequency Band	2402 to 2480 MHz
Number of Available Channels	Legacy : 0~79 (1 MHz/CH) BLE : 0~39 (2 MHz/CH)
Signaling Data Rate	Legacy : 3 Mbps data rate; throughput up to 2.17 Mbps BLE : 1 Mbps data rate; throughput up to 0.2 Mbps Legacy : Synchronous Connection Oriented links up to 3, 64 kbps, voice channels Legacy : Asynchronous Connection Less links 2178.1 kbps/177.1 kbps

Technical Specifications

	asymmetric (3-DH5) or 864 kbps symmetric (3-EV5)
Transmit Power	The Bluetooth component shall operate as a Class II Bluetooth device with a maximum transmit power of + 9.5 dBm for BR and EDR.
Power Consumption	Peak (Tx): 330 mW
	Peak (Rx): 230 mW
	Selective Suspend: 17 mW
Bluetooth Software	1. Microsoft Windows Bluetooth Software
Supported Link Topology	2. Linux/Chrome OS Bluetooth Software.
Power Management	ACPI and PCI Express compliant power management 802.11 compliant power saving mode
Certifications	FCC (47 CFR) Part 15C/E, Section 15.247, 15.249, 15.407
	ETSI 300 328, ETSI 301 893, ETSI 303 687
Bluetooth Software Supported	BT4.1-ESR 5/6/7 Compliance LE Link Layer Ping LE Dual Mode LE Link Layer LE Low Duty Cycle Directed Advertising LE L2CAP Connection Oriented Channels Train Nudging & Interlaced Scan BT4.2 ESR08 Compliance LE Secure Connection- Basic/Full LE Privacy 1.2 –Link Layer Privacy LE Privacy 1.2 –Extended Scanner Filter Policies LE Data Packet Length Extension FAX Profile (FAX) Basic Imaging Profile (BIP)2 Headset Profile (HSP) Hands Free Profile (HFP) Advanced Audio Distribution Profile (A2DP) BT5.2 ESR9/10 Compliance LE Advertisement Extensions

Technical Specifications

		Channel Selection Algo
		Limited High Duty Cycle Non-Connectable Advertising
		2Mbps LE
		LE Long Range
		BT5.3
		Host to Controller Encryption Key Control Enahancements
		Compliance to the latest Errata Sectipn 12.3 of BT 5.3 specification

1. Wi-Fi 6E requires a Wi-Fi 6E router, sold separately, to function in the 6GHz band. Availability of public wireless access points limited. Wi-Fi 6E is backwards compatible with prior 802.11 specs. And available in countries where Wi-Fi 6E is supported. Wi-Fi 6E is designed to support gigabit data rate when transferring files between two devices connected to the same router. Requires a wireless router, sold separately, that supports 80MHz and higher channels.
2. Check latest software/driver release for updates on supported security features.
3. The FCC has declared as of September 1, 2014 products that utilize passive scanning on channel 12/13 and are capable of transmitting must fully comply with requirements of 15.247 or otherwise disable those channels.
4. Receiver sensitivity is measured at a packet error rate of 8% for 802.11b (CKK modulation) and a packet error rate of 10% for 802.11a/g (OFDM modulation).

Intel® AX211 Wi-Fi 6E +BT 5.3 M.2 160MHz CNVi World-wide WLAN non-vPro® Wireless Card[1]	**Wireless LAN Standards**	IEEE 802.11a
		IEEE 802.11b
		IEEE 802.11g
		IEEE 802.11n
		IEEE 802.11ac
		IEEE 802.11ax
		IEEE 802.11d
		IEEE 802.11e
		IEEE 802.11h
		IEEE 802.11i
		IEEE 802.11k
		IEEE 802.11r
		IEEE 802.11v
	Interoperability	Wi-Fi certified
	Frequency Band	▪802.11b/g/n/ax 2.402 - 2.482 GHz ▪802.11a/n/ac/ax

Technical Specifications

	4.9 - 4.95 GHz (Japan) 5.15 - 5.25 GHz 5.25 - 5.35 GHz 5.47 - 5.725 GHz 5.825 - 5.850 GHz 5.955 - 6.415 GHz 6.435 - 6.515 GHz 6.535 - 6.875 GHz 6.895 - 7.115 GHz
Data Rates	▪ 802.11b: 1, 2, 5.5, 11 Mbps ▪ 802.11g: 6, 9, 12, 18, 24, 36, 48, 54 Mbps ▪ 802.11a: 6, 9, 12, 18, 24, 36, 48, 54 Mbps ▪ 802.11n: max 300Mbps ▪ 802.11ac : 1733Mbps ▪ 802.11ax : max 2.4Gbps
Modulation	Direct Sequence Spread Spectrum OFDM, BPSK, QPSK, CCK, 16-QAM, 64-QAM, 256-QAM , 1024QAM
Security[2]	▪ IEEE and WiFi compliant 64 / 128 bit WEP encryption for a/b/g mode only ▪ AES-CCMP: 128 bit in hardware ▪ 802.1x authentication ▪ WPA, WPA2: 802.1x. WPA-PSK, WPA2-PSK, TKIP, and AES. ▪ WPA2 certification ▪ WPA3 certification ▪ IEEE 802.11i ▪ WAPI
Network Architecture Models	Ad-hoc (Peer to Peer) Infrastructure (Access Point Required)
Roaming	IEEE 802.11 compliant roaming between access points
Output Power[3]	▪ 802.11b : +17dBm minimum ▪ 802.11g : +16dBm minimum ▪ 802.11a : +17dBm minimum ▪ 802.11n HT20(2.4GHz) : +14dBm minimum

Technical Specifications

	▪ 802.11n HT40(2.4GHz) : +13dBm minimum ▪ 802.11n HT20(5GHz) : +14dBm minimum ▪ 802.11n HT40(5GHz) : +13dBm minimum ▪ 802.11ac VHT80(5GHz) : +10dBm minimum ▪ 802.11ac VHT160(5GHz) : +10dBm minimum ▪ 802.11ax HE40(2.4GHz) : +12dBm minimum ▪ 802.11ax HE80(5GHz) : +10dBm minimum ▪ 802.11ax HE160(5GHz) : +10dBm minimum
Power Consumption	▪ Transmit mode 2.0 W ▪ Receive mode 1.6 W ▪ Idle mode (PSP) 180 mW (WLAN Associated) ▪ Idle mode 50 mW (WLAN unassociated) ▪ Connected Standby 10mW ▪ Radio disabled 8 mW
Power Management	ACPI and PCI Express compliant power management 802.11 compliant power saving mode
Receiver Sensitivity[4]	▪ 802.11b, 1Mbps : -93.5dBm maximum ▪ 802.11b, 11Mbps : -84dBm maximum ▪ 802.11a/g, 6Mbps : -86dBm maximum ▪ 802.11a/g, 54Mbps : -72dBm maximum ▪ 802.11n, MCS07 : -67dBm maximum ▪ 802.11n, MCS15 : -64dBm maximum ▪ 802.11ac, MCS0(VHT80) : -84dBm maximum ▪ 802.11ac, MCS9(VHT80) : -59dBm maximum ▪ 802.11ac, MCS9(VHT160) : -58.5dBm maximum ▪ 802.11ax, MCS11(HE40): -57dBm maximum ▪ 802.11ax, MCS11(HE80): -54dBm maximum ▪ 802.11ax, MCS11(HE160): -53.5dBm maximum
Antenna type	High efficiency antenna with spatial diversity Two embedded tri-band 2.4/5/6 GHz antennas are provided to the card to support WLAN MIMO communications and Bluetooth communications
Form Factor	PCI-Express M.2 MiniCard
Dimensions	Type 2230 : 2.3 x 22.0 x 30.0 mm
Weight	Type 2230 : 2.8g
Operating Voltage	3.3v +/- 9%

Technical Specifications

Temperature	**Operating**	14° to 158° F (-10° to 70° C)
	Non-operating	-40° to 176° F (-40° to 80° C)
Humidity	**Operating**	10% to 90% (non-condensing)
	Non-operating	5% to 95% (non-condensing)
Altitude	**Operating**	0 to 10,000 ft (3,048 m)
	Non-operating	0 to 50,000 ft (15,240 m)
LED Activity	LED Amber - Radio OFF; LED OFF - Radio ON	

HP Integrated Module with Bluetooth 4.0/4.1/4.2/5.0/5.1/5.2/5.3 Wireless Card Technology

Bluetooth Specification	4.0/4.1/4.2/5.0/5.1/5.2/5.3 Compliant
Frequency Band	2402 to 2480 MHz
Number of Available Channels	Legacy : 0~79 (1 MHz/CH) BLE : 0~39 (2 MHz/CH)
Signaling Data Rate	Legacy : 3 Mbps data rate; throughput up to 2.17 Mbps BLE : 1 Mbps data rate; throughput up to 0.2 Mbps Legacy : Synchronous Connection Oriented links up to 3, 64 kbps, voice channels Legacy : Asynchronous Connection Less links 2178.1 kbps/177.1 kbps asymmetric (3-DH5) or 864 kbps symmetric (3-EV5)
Transmit Power	The Bluetooth component shall operate as a Class II Bluetooth device with a maximum transmit power of + 9.5 dBm for BR and EDR.
Power Consumption	Peak (Tx): 330 mW Peak (Rx): 230 mW Selective Suspend: 17 mW
Bluetooth Software Supported Link Topology	1. Microsoft Windows Bluetooth Software 2. Linux/Chrome OS Bluetooth Software.
Power Management	ACPI and PCI Express compliant power management 802.11 compliant power saving mode
Certifications	FCC (47 CFR) Part 15C/E, Section 15.247, 15.249, 15.407 ETSI 300 328, ETSI 301 893, ETSI 303 687
Bluetooth Software Supported	BT4.1-ESR 5/6/7 Compliance LE Link Layer Ping LE Dual Mode

Technical Specifications

LE Link Layer
LE Low Duty Cycle Directed Advertising
LE L2CAP Connection Oriented Channels
Train Nudging & Interlaced Scan
BT4.2 ESR08 Compliance
LE Secure Connection- Basic/Full
LE Privacy 1.2 –Link Layer Privacy
LE Privacy 1.2 –Extended Scanner Filter Policies
LE Data Packet Length Extension
FAX Profile (FAX)
Basic Imaging Profile (BIP)2
Headset Profile (HSP)
Hands Free Profile (HFP)
Advanced Audio Distribution Profile (A2DP)
BT5.2
ESR9/10 Compliance
LE Advertisement Extensions
Channel Selection Algo
Limited High Duty Cycle Non-Connectable Advertising
2Mbps LE
LE Long Range
BT5.3
Host to Controller Encryption Key Control Enahancements
Compliance to the latest Errata Sectipn 12.3 of BT 5.3 specification

1. Wi-Fi 6E requires a Wi-Fi 6E router, sold separately, to function in the 6GHz band. Availability of public wireless access points limited. Wi-Fi 6E is backwards compatible with prior 802.11 specs. And available in countries where Wi-Fi 6E is supported. Wi-Fi 6E is designed to support gigabit data rate when transferring files between two devices connected to the same router. Requires a wireless router, sold separately, that supports 80MHz and higher channels.
2. Check latest software/driver release for updates on supported security features.
3. The FCC has declared as of September 1, 2014 products that utilize passive scanning on channel 12/13 and are capable of transmitting must fully comply with requirements of 15.247 or otherwise disable those channels.
4. Receiver sensitivity is measured at a packet error rate of 8% for 802.11b (CKK modulation) and a packet error rate of 10% for 802.11a/g (OFDM modulation).

Technical Specifications

HP 5G Sub-6 Cat 19 WWAN eSIM [1]	**Technology/Operating bands**	WCDMA/HSPA+ operating bands: Band 1: 1920 to 1980 MHz (UL), 2110 to 2170 MHz (DL) Band 2: 1850 to 1910 MHz (UL), 1930 to 1990 MHz (DL) Band 4: 1710 to 1755 MHz (UL), 2110 to 2155 MHz (DL) Band 5: 824 to 849 MHz (UL), 869 to 894 MHz (DL) Band 8: 880 to 915 MHz (UL), 925 to 960 MHz (DL) LTE FDD/TDD operating bands: Band 1: 1920 to 1980 MHz (UL), 2110 to 2170 MHz (DL) Band 2: 1850 to 1910 MHz (UL), 1930 to 1990 MHz (DL) Band 3: 1710 to 1785 MHz (UL), 1805 to 1880 MHz (DL) Band 4: 1710 to 1755 MHz (UL), 2110 to 2155 MHz (DL) Band 5: 824 to 849 MHz (UL), 869 to 894 MHz (DL) Band 7: 2500 to 2570 MHz (UL), 2620 to 2690 MHz (DL) Band 8: 880 to 915 MHz (UL), 925 to 960 MHz (DL) Band 12: 699 to 716 MHz (UL), 729 to 746 MHz (DL) Band 13: 777 to 787 MHz (UL), 746 to 756 MHz (DL) Band 14: 788 to 798 MHz (UL), 758 to 768 MHz (DL) Band 17: 704 to 716 MHz (UL), 734 to 746 MHz (DL) Band 18: 815 to 830 MHz (UL), 860 to 875 MHz (DL) Band 19: 830 to 845 MHz (UL), 875 to 890 MHz (DL) Band 20: 832 to 862 MHz (UL), 791 to 821 MHz (DL) Band 25: 1850 to 1915 MHz (UL), 1930 to 1995 MHz (DL) Band 26: 814 to 849 MHz (UL), 859 to 894 MHz (DL) Band 28: 703 to 748 MHz (UL), 758 to 803 MHz (DL) Band 29: 717 to 728 MHz (DL) Band 30: 2305 to 2315 MHz (UL) 2350 to 2360 MHz (DL) Band 32: 1452 to 1496 MHz (DL) Band 34: 2010 to 2025 MHz (UL/DL) Band 38: 2570 to 2620 MHz (UL/DL) Band 39: 1880 to 1920 MHz (UL/DL) Band 40: 2300 to 2400 MHz (UL/DL) Band 41: 2496 to 2690 MHz (UL/DL) Band 42: 3400 to 3600 MHZ (UL/DL) Band 43: 3400 to 3800 MHZ (UL/DL) Band 46: 5150 to 5925 MHZ (DL) Band 48: 3550 to 3700 MHZ (UL/DL) Band 66: 1710 to 1800 MHz (UL), 2110 to 2200 MHz (DL) Band 71: 663 to 698 MHz (UL), 617 to 652 MHz (DL)

Technical Specifications

	5GNR Sub 6GHZ n1: 1920 to 1980 MHz (UL), 2110 to 2170 MHz (DL) n2: 1850 to 1910 MHz (UL), 1930 to 1990 MHz (DL) n3: 1710 to 1785 MHz (UL), 1805 to 1880 MHz (DL) n5: 824 to 849 MHz (UL), 869 to 894 MHz (DL) n7: 2500 to 2570 MHz (UL), 2620 to 2690 MHz (DL) n8: 880 to 915 MHz (UL), 925 to 960 MHz (DL) n20: 832 to 862 MHz (UL), 791 to 821 MHz (DL) n25: 1850 to 1915 MHz (UL), 1930 to 1995 MHz (DL) n28: 703 to 748 MHz (UL), 758 to 803 MHz (DL) n30: 2305 to 2315 MHz (UL) 2350 to 2360 MHz (DL) n38: 2570 to 2620 MHz (UL/DL) n40: 2300 to 2400 MHz (UL/DL) n41: 2496 to 2690 MHz (UL/DL) n48: 3550 to 3700 MHZ (UL/DL) n66: 1710 to 1800 MHz (UL), 2110 to 2200 MHz (DL) n71: 663 to 698 MHz (UL), 617 to 652 MHz (DL) n77: 3300 to 4200 MHz (UL/DL) n78: 3300 to 3800 MHz (UL/DL) n79: 4400 to 5000 MHz (UL/DL)
Wireless protocol standards	NR Sub6G rel15 200MHz 2 DLCA, 256 QAM 200MHz 2 ULCA, 256 QAM 15KHz/30KHz SCS for FDD/TDD LTE Rel15 100MHz 5 DLCA, 256 QAM 40MHz 2 ULCA, 256 QAM UMTS Rel8
GPS	GPS only support L1 C/A
GPS bands	GPS: L1 (1575.42MHz) GLONASS: L1 (1602MHz) BeidouB1(1561.098MHz) Galileo E1 (1575.42) QZSS(1575.42 MHz)
Maximum data rates	Sub-6 SA Peak DL 4.67Gbps/UL 1.25Gbps Sub-6 NSA Peak DL 3.74Gbps/UL 835Mbps

Technical Specifications

		LTE Peak DL 1.6Gbps (CAT19)/UL 211Mbps (CAT18) UMTS/HSPA+ DL DC-HSPA+: 42 Mbps (CAT24)/UL 11.5 Mbps (CAT7)
	Maximum output power	NR： 23 dBm in all band except (n30 = 22dBm & n48=21dBm & n77=25dBm & n41/n77/n78 = 26dBm) LTE: 23 dBm in all band except (B30 = 22dBm & B48=21dBm & B41=26dBm) UMTS: 23.5 dBm
	Maximum power consumption	3500 mA (peak); 1674mA (average)
	Form Factor	M.2, 3052-S3 Key B
	Weight	8.7g
	Dimensions (Length x Width x Thickness)	52 mm × 30 mm × 2.3 mm
	embedded eSIM	Support

1. 5G module is optional and must be configured at the factory. Module designed for 5G NR NSA (non-standalone) networks as carriers deploy Evolved-Universal Terrestrial Radio Access New Radio Dual Connectivity (ENDC) with both 100Mhz of 5G NR and LTE channel bandwidth, using 256QAM 4x4 as defined by 3GPP. Module requires activation and separately purchased service contract. Check with service provider for coverage and availability in your area. Data connection, upload and download speeds will vary due to network, location, environment, network conditions, and other factors. Backwards compatible to 4G LTE and 3G HSPA technologies. 5G module planned to be available in select platforms and select countries, where carrier supported.

HP 4G LTE-A Pro Cat16 WWAN eSIM [1]	**Technology/Operating bands**	WCDMA/HSPA+ operating bands: Band 1: 1920 to 1980 MHz (UL), 2110 to 2170 MHz (DL) Band 2: 1850 to 1910 MHz (UL), 1930 to 1990 MHz (DL) Band 4: 1710 to 1755 MHz (UL), 2110 to 2155 MHz (DL) Band 5: 824 to 849 MHz (UL), 869 to 894 MHz (DL) Band 8: 880 to 915 MHz (UL), 925 to 960 MHz (DL) LTE FDD/TDD operating bands:

Technical Specifications

	Band 1: 1920 to 1980 MHz (UL), 2110 to 2170 MHz (DL) Band 2: 1850 to 1910 MHz (UL), 1930 to 1990 MHz (DL) Band 3: 1710 to 1785 MHz (UL), 1805 to 1880 MHz (DL) Band 4: 1710 to 1755 MHz (UL), 2110 to 2155 MHz (DL) Band 5: 824 to 849 MHz (UL), 869 to 894 MHz (DL) Band 7: 2500 to 2570 MHz (UL), 2620 to 2690 MHz (DL) Band 8: 880 to 915 MHz (UL), 925 to 960 MHz (DL) Band 12: 699 to 716 MHz (UL), 729 to 746 MHz (DL) Band 13: 777 to 787 MHz (UL), 746 to 756 MHz (DL) Band 14: 788 to 798 MHz (UL), 758 to 768 MHz (DL) Band 17: 704 to 716 MHz (UL), 734 to 746 MHz (DL) Band 18: 815 to 830 MHz (UL), 860 to 875 MHz (DL) Band 19: 830 to 845 MHz (UL), 875 to 890 MHz (DL) Band 20: 832 to 862 MHz (UL), 791 to 821 MHz (DL) Band 25: 1850 to 1915 MHz (UL), 1930 to 1995 MHz (DL) Band 26: 814 to 849 MHz (UL), 859 to 894 MHz (DL) Band 28: 703 to 748 MHz (UL), 758 to 803 MHz (DL) Band 29: 717 to 728 MHz (DL) Band 30: 2305 to 2315 MHz (UL) 2350 to 2360 MHz (DL) Band 32: 1452 to 1496 MHz (DL) Band 34: 2010 to 2025 MHz (UL/DL) Band 38: 2570 to 2620 MHz (UL/DL) Band 39: 1880 to 1920 MHz (UL/DL) Band 40: 2300 to 2400 MHz (UL/DL) Band 41: 2496 to 2690 MHz (UL/DL) Band 42: 3400 to 3600 MHZ (UL/DL) Band 43: 3400 to 3800 MHZ (UL/DL) Band 48: 3550 to 3700 MHZ (UL/DL) Band 66: 1710 to 1800 MHz (UL), 2110 to 2200 MHz (DL) Band 71: 663 to 698 MHz (UL), 617 to 652 MHz (DL)
Wireless protocol standards	3GPP LTE Rel15 LTE Specification, 100MHz 5 DLCA, 256 QAM, DL 1.0Gbps (CAT16)/ 40MHz 2 ULCA, 256 QAM, UL 211Mbps (CAT18) WCDMA 3GPP Release 8 UMTS Specification, DL UMTS: 384 kbps/UL 384 kbp, DL DC-HSPA+: 42 Mbps (CAT24)/UL 11.5 Mbps (CAT7)

Technical Specifications

		WCDMA R99, 3GPP Release 5, 6, 7 and 8 UMTS Specification
	GPS	Standalone, A-GPS (MS-A, MS-B)
	GPS bands	GPS: L1 (1575.42MHz) GLONASS: L1 (1602MHz) BeidouB1(1561.098MHz) Galileo E1 (1575.42) QZSS(1575.42 MHz)
	Maximum data rates	LTE: ue-CategoryDL 16, (DL : 1 Gbps) ue-CategoryUL 18 , (UL: 211Mbps) DC-HSPA+: 42 Mbps (Download), 11.5 Mbps (Upload)
	Maximum output power	HPUE: Not supported LTE: 23 dBm in all band except (B30= 22dBm& B48= 21dBm) UMTS: 23.5 dBm
	Maximum power consumption	LTE: 1300 mA (peak); 1100 mA (average) HSPA+: 1,100 mA (peak); 800 mA (average)
	Form Factor	M.2, 3052-S3 Key B
	Weight	8 g
	Dimensions (Length x Width x Thickness)	52 mm × 30 mm × 2.3 mm
	eSIM	Support

1. Mobile Broadband is an optional feature. Connection requires wireless data service contract, network support, and is not available in all areas. Contact service provider to determine the coverage area and availability. Connection speeds will vary due to location, environment, network conditions, and other factors. 4G LTE not available on all products or in all countries.

NFC NXP NPC300	**Dimensions (L x W x H)**	17 x 10 x 2.0 mm
	Chipset	NPC300
	System interface	I2C
	NFC RF standards	ISO/IEC 14443 A ISO/IEC 14443 B ISO/IEC 15693

Technical Specifications

	ISO/IEC 18092 ECMA-340 NFCIP-1 Target and Initiator ECMA-320 NFCIP-2
NFC Forum Support	Tag Type 1, Type 2, Type3 and Type 4, NFCIP-1 and NFCIP-2
Reader (PCD-VCD) Mode	ISO/IEC 14443 A ISO/IEC 14443 B ISO/IEC 15693 MIFARE 1K MIFARE 4K MIFARE DESFire FeliCa Jewel and Topaz cards
Card Emulation (PICC-VICC) Mode	ISO/IEC 14443 A ISO/IEC 14443 B and B' MIFARE FeliCa
Frequency	13.56 MHz
NFC Modes Supported	Reader/Writer, Peer-to-Peer
Raw RF Data Rates	106, 212, 424, 848 kbps
Operating temperature	0°C to 70°C
Storage temperature	-20°C to 125°C
Humidity	10-90% operating 5-95% non-operating
Supply Operating voltage	4.35 to 5.25 Volts
I/O Voltage	1.8V or 3.3V
Power Consumption (Booster enable, VBAT= 3.3V, VCC_BOOST = 5V)	
Mode	Power Consumption, Typical
Polling	7.3 mA
Detected Test Tag Type 1	Total 283.8 mA Net Module 236.8 mA
Detected Test Tag Type 2	Total 288.8 mA Net Module 241.8 mA

Technical Specifications

	Detected Test Tag Type 3	Total 287.7 mA Net Module 240.7 mA
	Detected Test Tag Type 4	Total 282.3 mA Net Module 235.3 mA
	Antenna	Antenna connector, 0.5mm pitch, 7 connector FPC. Antenna matching is external to module.
Qualcomm® 9205 [1]	**Technology/Operating bands**	FDD LTE: 2100 (Band 1), 1900 (Band 2), 1800 (Band 3), 1700/2100 (Band 4), 850 (Band 5), 900 (Band 8), 700 (Band 12 lower), 700 (Band 13 upper), 700 (Band 14 upper), 850 (Band 18 lower), 850 (Band 19 upper), 800 (Band 20), 1900 (Band 25), 850 (Band 26), 800 (Band 27), 700 (Band 28), 1700/2100 (Band 66), 700 (band 85) MHz. GSM/GPRS/EGPRS: 850, 900, 1800, 1900MHz.
	Wireless protocol standards	▪ 3GPP TS 51.010-1 V10.5.0: Mobile Station (MS) conformance specification; Part 1: Conformance specification ▪ 3GPP TS 36.521-1 V14.3.0: User Equipment (UE) conformance specification; Radio transmission and reception; Part 1: Conformance testing ▪ 3GPP TS 21.111 V10.0.0: USIM and IC card requirements ▪ 3GPP TS 51.011 V4.15.0: Specification of the Subscriber Identity Module -Mobile Equipment (SIM-ME) interface ▪ 3GPP TS 31.102 V10.11.0: Characteristics of the Universal Subscriber Identity Module (USIM) application ▪ 3GPP TS 31.11 V10.16.0: Universal Subscriber Identity Module (USIM) Application Toolkit (USAT) ▪ 3GPP TS 36.124 V10.3.0: Electro Magnetic Compatibility (EMC) requirements for mobile terminals and ancillary equipment ▪ 3GPP TS 27.007 V10.0.8: AT command set for User Equipment (UE) ▪ 3GPP TS 27.005 V10.0.1: Use of Data Terminal Equipment - Data Circuit terminating Equipment (DTE - DCE) interface for Short Message Service (SMS) and Cell Broadcast Service (CBS)
	GPS	Standalone GPS/Beidou/Glonass, A-GPS (MS-A, MS-B)
	GPS bands	1575.42 MHz ± 1.023 MHz, GLONASS 1596-1607MHz, Beidou 1561.098 MHz

Technical Specifications

Maximum data rates	LTE FDD: 375 Kbps (Download), 1119 Kbps (Upload) GSM: - GPRS: 107 Kbps (Download), 85.6 Kbps (Upload) - EGPRS: 296 Kbps (Download), 236.8 Kbps (Upload)
Maximum output power	LTE: 21.5 dBm in all band GSM:34dBm
Maximum power consumption	LTE: 1,200 mA (peak); 900 mA (average) HSPA+: 1,100 mA (peak); 800 mA (average)
Form Factor	M.2, 2242-S3 Key B
Weight	5.5 g
Dimensions (Length x Width x Thickness)	22 x 42 x 2.3 mm
eSIM	Support

1.LPWAN (also called Mobile Narrowband) supports HP Protect & Trace with Wolf Connect service through the subscription term, but does not support mobile broadband use.

Technical Specifications

POWER

1. Actual battery Watt-hours (Wh) will vary from design capacity. Battery capacity will naturally decrease with shelf life, time, usage, environment, temperature, system configuration, loaded apps, features, power management settings and other factors

AC Adapter 65 Watt nPFC Standard USB type C Straight 1.8m	**Weight**	240g ±10g	
	Input	100-240Vac	
		Input Efficiency	81.50% min at 115 Vac/ 230 Vac @5.00V 86.70% min at 115 Vac/ 230 Vac @9.00V 88.00% min at 115 Vac/ 230 Vac @12.00V 89.00% min at 115 Vac/ 230 Vac @15.00V 89.00% min at 115 Vac/ 230 Vac @20.00V
		Input frequency range	47-63Hz
		Input AC current	Max. 1.6 A at 90 Vac
	Output	**Output power**	5V/15W 9V/27W 12V/60W 15V/65W 20V/65W
		DC output	5V/9V/12V/15V/20V
		Hold-up time	100% load 5ms at 115 Vac input
		Output current limit	< 8.0A
		AC Inlet Type	C6
		DC Cable Connector	USB type C
		DC Cable Material	PVC
	Connector	C6	
	Environmental Design	**Operating temperature**	32°F to 95°F (0° to 35°C)
		Non-operating (storage) temperature	-4°F to 185°F (-20° to 85°C)
		Altitude	0 to 16,400 ft (0 to 5000m)
		Humidity	20% to 95%
		Storage Humidity	10% to 95%

Technical Specifications

	EMI and Safety Certifications	CE Mark - full compliance with LVD and EMC directives Worldwide safety standards - IEC60950-1 and IEC62368-1 : 2018, EN62368-1:2014+A11, UL 62368-1 Agency approvals - C-UL-US, TUV/GS, TUV/PSE, EN55032 Class B, FCC Class B, CISPR32 Class B, CCC and CECP, CU(EAC), EAEU, KCC(Safety+EMC) and K-MEPS, NOM-001 and 029 NYCE, NRcan, NRCS, ISC, SEC, PSB, Argentina S-mark, Australia RCM, BIS, BSMI, UAE, UKCA DoC

HP 65W Slim USB-C Straight AC Power Adapter	**Weight**	220g ± 10g	
	Input	100-240Vac	
		Input Efficiency	81.50% min at 115 Vac/ 230 Vac @5.00V 86.70% min at 115 Vac/ 230 Vac @9.00V 88.00% min at 115 Vac/ 230 Vac @12.00V 89.00% min at 115 Vac/ 230 Vac @15.00V 89.00% min at 115 Vac/ 230 Vac @20.00V
		Input frequency range	47-63Hz
		Input AC current	Max. 1.6 A at 90 Vac
	Output	**Output power**	5V/15W 9V/27W 12V/60W 15V/65W 20V/65W
		DC output	5V/9V/12V/15V/20V
		Hold-up time	100% load 5ms at 115 Vac input
		Output current limit	< 8.0A
		AC Inlet Type	C6
		DC Cable Connector	USB type C
		DC Cable Material	PVC
	Connector	C6	
	Environmental Design	**Operating temperature**	32°F to 95°F (0° to 35°C)

Technical Specifications

	Non-operating (storage) temperature	-4°F to 185°F (-20° to 85°C)
	Altitude	0 to 16,400 ft (0 to 5000m)
	Humidity	20% to 95%
	Storage Humidity	10% to 95%
EMI and Safety Certifications	CE Mark - full compliance with LVD and EMC directives Worldwide safety standards - IEC60950-1 and IEC62368-1 : 2018, EN62368-1:2014+A11, UL 62368-1 Agency approvals - C-UL-US, TUV/GS, TUV/PSE, EN55032 Class B, FCC Class B, CISPR32 Class B, CCC and CECP, CU(EAC), EAEU, KCC(Safety+EMC) and K-MEPS, NOM-001 and 029 NYCE, NRcan, NRCS, ISC, SEC, PSB, Argentina S-mark, Australia RCM, BIS, BSMI, UAE, UKCA DoC	

Technical Specifications

HP 3-cell Long Life Li-Ion (56WHr)[1]	**Weight**	0.205kg +/- 10g (0.474 lb)	
	Cells/Type	3cell Lithium-Ion Polymer cell / 586075	
	Energy	**Voltage**	11.58V
		Amp-hour capacity	4.84Ah
		Watt-hour capacity[1]	56.04Wh
	Temperature	**Operating (Charging)**	32˚ to 113˚ F (0˚ to 45˚ C)
		Operating (Discharging)	14˚ to 140˚ F (-10˚ to 60˚ C)
		Optional Travel Battery Available	No

AUDIO

HD Stereo Codec	Realtek ALC3315
Audio I/O Ports	3.5mm Headset: CTIA only; Headphone-out
Internal Speaker Amplifier	Cirrus Logic High-Efficiency Boosted Class D Amplifier
Multi-streaming Capable	Playback multi-streaming can be enabled in the audio control panel to allow independent audio streams to be sent to/from the front jacks or integrated speaker., Following MSFT Behavior
Sampling	DAC: 48.0 kHZ to 48.0 kHz ADC: 48.0 kHZ to 48.0 kHz
Wavetable Syntheses	N/A
# of Channels on Line-Out	N/A
Internal Speaker	Yes

FINGERPRINT READER

Sensor vendor	SYNAPTICS
Sensor type	Capacitive
DPI resolution	363 DPI
Scan area	104 x 86 pixels
False Rejection Rate	< 3%
False Acceptance Rate	< 0.001%

Technical Specifications

Mobile Voltage Operation	3V ~ 3.6 V
Operating Temperature	0°C ~ 60°C (32°F ~ 140°F)
Current Consumption Image	100 mA max
Low Latency Wait For Finger	260 uA
Capture Rate	50 frames/sec
ESD Resistance	IEC 61000-4-2 4B (+15KV)
Detection Matrix	363 dpi / 7.4 x 6.0 mm sensor area

Sensor vendor	ELAN
Sensor type	Capacitive
DPI resolution	508 DPI
Scan area	80 x 80 pixels
False Rejection Rate	< 3%
False Acceptance Rate	< 0.001%
Mobile Voltage Operation	2.7 V ~ 3.6 V
Operating Temperature	-20°C ~ 80°C (-4°F ~ 176°F)
Current Consumption Image	35 mA max
Low Latency Wait For Finger	300 uA
Capture Rate	50 frames/sec
ESD Resistance	IEC 61000-4-2 4B (+15KV)
Detection Matrix	508 dpi / 4.0 x 4.0 mm sensor area

Technical Specifications

ENVIRONMENTAL DATA

Eco-Label Certifications & declarations	This product has received or is in the process of being certified to the following approvals and may be labeled with one or more of these marks: • IT ECO declaration • US ENERGY STAR® • US Federal Energy Management Program (FEMP) • EPEAT® Gold registered in the United States. See http://www.epeat.net for registration status in your country. • TCO Certified • China Energy Conservation Program (CECP) • China State Environmental Protection Administration (SEPA) • Taiwan Green Mark • Korea Eco-label • Japan PC Green label*		
Sustainable Impact Specifications	• Product Carbon Footprint (hp.com) • Ocean-bound plastic in Speaker • 60% post-consumer recycled plastic • 65% recycled metal • Low halogen • Outside Box and corrugated cushions are 100% sustainably sourced and recyclable • Molded Paper Pulp Cushion inside box is 100% sustainably sourced and recyclable • Bulk packaging available		
System Configuration	The configuration used for the Energy Consumption and Declared Noise Emissions data for the Notebook model is based on a "Typically Configured Notebook".		
Energy Consumption (in accordance with US ENERGY STAR® test method)	**115VAC, 60Hz**	**230VAC, 50Hz**	**100VAC, 50Hz**
Normal Operation (Sort idle)	5.88 W	6.17 W	5.92 W
Normal Operation (Long idle)	1.66 W	1.85 W	1.76 W
Sleep	1.66 W	1.85 W	1.76 W
Off	0.46 W	0.48 W	0.41 W
	NOTE: Energy efficiency data listed is for an ENERGY STAR® compliant product if offered within the model family. HP computers marked with the ENERGY STAR® Logo are compliant with the applicable U.S. Environmental Protection Agency (EPA) ENERGY STAR® specifications for computers. If a model family does not offer ENERGY STAR® compliant configurations, then		

Technical Specifications

	energy efficiency data listed is for a typically configured PC featuring a hard disk drive, a high efficiency power supply, and a Microsoft Windows® operating system.		
Heat Dissipation*	**115VAC, 60Hz**	**230VAC, 50Hz**	**100VAC, 50Hz**
Normal Operation (Short idle)	20.1 BTU/hr	21.1 BTU/hr	20.2 BTU/hr
Normal Operation (Long idle)	5.7 BTU/hr	6.3 BTU/hr	6.0 BTU/hr
Sleep	5.7 BTU/hr	6.3 BTU/hr	6.0 BTU/hr
Off	1.6 BTU/hr	1.6 BTU/hr	1.4 BTU/hr
	* **NOTE:** Heat dissipation is calculated based on the measured watts, assuming the service level is attained for one hour.		
Declared Noise Emissions (in accordance with ISO 7779 and ISO 9296)	Sound Power (L_{WAd}, bels)	Sound Pressure (L_{pAm}, decibels)	
Typically Configured – Idle	3.1	20.6	
Operating (SSD)	3.3	22.8	
Operating	4.0	31.5	
Longevity and Upgrading	This product can be upgraded, possibly extending its useful life by several years. Upgradeable features and/or components contained in the		
	Spare parts are available throughout the warranty period and or for up to “5” years after the end of production.		
Additional Information	• This product is in compliance with the Restrictions of Hazardous Substances (RoHS) directive - 2011/65/EC. • This HP product is designed to comply with the Waste Electrical and Electronic Equipment (WEEE) Directive – 2002/96/EC. • This product is in compliance with California Proposition 65 (State of California; Safe Drinking Water and Toxic Enforcement Act of 1986). • This product is in compliance with the IEEE 1680 (EPEAT) standard at the Gold level, see www.epeat.net • Plastics parts weighing over 25 grams used in the product are marked per ISO11469 and ISO1043. • This product is 94% recycle-able when properly disposed of at end of life.		

Technical Specifications

Packaging Materials	**External:**	PAPER/Corrugated	220 g
		PAPER/Corrugated	49 g
		PAPER/Molded Pulp	52 g
		PAPER/Molded Pulp	56 g
		PAPER/Paper	3 g
	Internal:	PLASTIC/Polyethylene low density - LDPE	13 g
	The plastic packaging material contains at least 0.0% recycled content.		
	The corrugated paper packaging materials contains at least 59.1% recycled content.		
RoHS Compliance	HP Inc. complies fully with materials regulations. We were among the first companies to extend the restrictions in the European Union (EU) Restriction of Hazardous Substances (RoHS) Directive to our products worldwide through the HP GSE. HP has contributed to the development of related legislation in Europe, as well as China, India, and Vietnam. We believe the RoHS directive and similar laws play an important role in promoting industry-wide elimination of substances of concern. We have supported the inclusion of additional substances—including PVC, BFRs, and certain phthalates—in future RoHS legislation that pertains to electrical and electronics products. We met our voluntary objective to achieve worldwide compliance with the new EU RoHS requirements for virtually all relevant products by July 2013, and we will continue to extend the scope of the commitment to include further restricted substances as regulations continue to evolve. To obtain a copy of the HP RoHS Compliance Statement, see HP RoHS position statement.		
Material Usage	This product does not contain any of the following substances in excess of regulatory limits (refer to the HP General Specification for the Environment at http://www.hp.com/hpinfo/globalcitizenship/environment/supplychain/gen_specifications.html): • Asbestos • Certain Azo Colorants • Certain Brominated Flame Retardants – may not be used as flame retardants in plastics • Cadmium • Chlorinated Hydrocarbons • Chlorinated Paraffins • Bis(2-Ethylhexyl) phthalate (DEHP) • Benzyl butyl phthalate (BBP)		

Technical Specifications

	• Dibutyl phthalate (DBP) • Diisobutyl phthalate (DIBP) • Formaldehyde • Halogenated Diphenyl Methanes • Lead carbonates and sulfates • Lead and Lead compounds • Mercuric Oxide Batteries • Nickel – finishes must not be used on the external surface designed to be frequently handled or carried by the user. • Ozone Depleting Substances • Polybrominated Biphenyls (PBBs) • Polybrominated Biphenyl Ethers (PBBEs) • Polybrominated Biphenyl Oxides (PBBOs) • Polychlorinated Biphenyl (PCB) • Polychlorinated Terphenyls (PCT) • Polyvinyl Chloride (PVC) – except for wires and cables, and certain retail packaging has been voluntarily removed from most applications. • Radioactive Substances • Tributyl Tin (TBT), Triphenyl Tin (TPT), Tributyl Tin Oxide (TBTO)
Packaging Usage	HP follows these guidelines to decrease the environmental impact of product packaging: • Eliminate the use of heavy metals such as lead, chromium, mercury and cadmium in packaging materials. • Eliminate the use of ozone-depleting substances (ODS) in packaging materials. • Design packaging materials for ease of disassembly. • Maximize the use of post-consumer recycled content materials in packaging materials. • Use readily recyclable packaging materials such as paper and corrugated materials. • Reduce size and weight of packages to improve transportation fuel efficiency. • Plastic packaging materials are marked according to ISO 11469 and DIN 6120 standards.
End-of-life Management and Recycling	HP offers end-of-life HP product return and recycling programs in many geographic areas. To recycle your product, please go to: http://www.hp.com/go/reuse-recycle or contact your nearest HP sales office. Products returned to HP will be recycled, recovered or disposed of in a responsible manner.

Technical Specifications

	The EU WEEE directive (2002/95/EC) requires manufacturers to provide treatment information for each product type for use by treatment facilities. This information (product disassembly instructions) is posted on the Hewlett Packard web site at: http://www.hp.com/go/recyclers. These instructions may be used by recyclers and other WEEE treatment facilities as well as HP OEM customers who integrate and re-sell HP equipment.
HP, Inc. Corporate Environmental Information	For more information about HP's commitment to the environment: Global Citizenship Report http://www.hp.com/hpinfo/globalcitizenship/gcreport/index.html Eco-label certifications http://www8.hp.com/us/en/hp-information/environment/ecolabels.html ISO 14001 certificates: http://h20195.www2.hp.com/V2/GetDocument.aspx?docname=c04755842 and http://www.hp.com/hpinfo/globalcitizenship/environment/pdf/cert.pdf
footnotes	• Percentage of ocean-bound plastic contained in each component varies by product • Recycled plastic content percentage is based on the definition set in the IEEE 1680.1-2018 standard. • External power supplies, WWAN modules, power cords, cables and peripherals excluded. • 100% outer box packaging and corrugated cushions made from sustainably sourced certified and recycled fibers. • Fiber cushions made from 100% recycled wood fiber and organic materials. • Plastic cushions are made from >90% recycled plastic.

Options and Accessories (Sold separately and availability may vary by country)

DOCKING (Sold Separately)

Docking station model #1	HP Thunderbolt 4 100W G6 Dock
Total number of supported displays (incl. the notebook display)	4
Max. resolutions supported	(4) 4K @60Hz* (2) 4K @ 120Hz* (3) QHD @ 120Hz* (1) QHD @ 360Hz*
Dock Connectors	1x HDMI 2.1, 2x DisplayPort 1.4, 1x Thunderbolt 4
HP Quick Connect Support	Yes
Technical limitations	**HP Quick Connect is supported on this platform.** *Requires DisplayPort 1.4 support with Display Stream Compression (DSC). Bluetooth required for HP Quick Connect. HP Quick Connect available on select HP notebooks. Maximum resolution and display support is dependent on the maximum capability of the notebook. **Maximum of (4) displays with maximum resolution of 5K@ 30Hz running** Thunderbolt Hosts: Maximum resolution possible is dual 8K displays @ 60Hz running Thunderbolt host or running a non-Thunderbolt host in high resolution mode @30Hz Non-Thunderbolt hosts: **The highest resolution for dual displays running a non-Thunderbolt host in multi-function mode is** (1) 5K dual cable (using both DP ports) +(1) 4K on USB-C DP port Non-Thunderbolt hosts support (3) displays with a maximum resolution of (2) 5K single cable + (1) 4K UHD @ 60 Hz in high resolution mode. In multi-function mode the maximum resolution for (3) displays is (2) 5K single cable @ 30Hz + (1) 4K UHD @ 30Hz.
Docking station model #2	HP USB-C Dock G5
Total number of supported displays (incl. the notebook display)	3
Max. resolutions supported	Multi-Function Mode: (2) 5k @ 30Hz and (1) 4k UHD @ 30Hz on any port High-Resolution Mode: (2) 5k @ 60Hz on DisplayPort ports and (1) 4k UHD @ 60Hz on HDMI port
Dock Connectors	1x HDMI 2.0, 2x DisplayPort 1.4

Options and Accessories (Sold separately and availability may vary by country)

Technical limitations	**Maximum resolution and display support is dependent on the maximum capability of the notebook.** **Highest resolution with dual displays is two 8K@ 60Hz host in High Resolution mode**. Three maximum displays supported are two 5K@ 30 Hz on DP ports plus one 4K UHD@ 30 Hz on HDMI in Multi-function mode The highest resolution for a non-Thunderbolt host in Multi-function mode is a single 5K dual cable (using both DP ports) + (1) 4K on HDMI port.
Docking station model #3	HP Thunderbolt 120W G4 Dock
Total number of supported displays (incl. the notebook display)	4
Max. resolutions supported	Quad 4K @60Hz Dual 8K single cable@30 for Thunderbolt hosts or USB-C hosts DisplayPort 1.4 with Display Stream Compression in High-Resolution Mode
Dock Connectors	2x HDMI 2.0, 2x DisplayPort 1.4, 1x Thunderbolt 4, 1x USB-C 3.2 Gen 2 DisplayPort
Technical limitations	Maximum resolution and display support is dependent on the maximum capability of the notebook. Thunderbolt Hosts: Maximum of (4) displays with maximum resolution of 5K@ 30Hz running Thunderbolt host. Maximum resolution possible is dual 8K displays @ 60Hz running Thunderbolt host or running a non-Thunderbolt host in high resolution mode @30Hz Non-Thunderbolt hosts: The highest resolution for dual displays running a non-Thunderbolt host in multi-function mode is (1) 5K dual cable (using both DP ports) +(1) 4K on USB-C DP port Non-Thunderbolt hosts support (3) displays with a maximum resolution of (2) 5K single cable + (1) 4K UHD @ 60 Hz in high resolution mode. In multi-function mode the maximum resolution for (3) displays is (2) 5K single cable @ 30Hz + (1) 4K UHD @ 30Hz.
Docking station model #4	HP USB-C G5 Essential Dock

Options and Accessories (Sold separately and availability may vary by country)

Total number of supported displays (incl. the notebook display)	3
Max. resolutions supported	Multi-Function Mode: (2) 5k @ 30Hz and (1) 4k UHD @ 30Hz on any port High-Resolution Mode: (2) 5k @ 60Hz on DisplayPort ports and (1) 4k UHD @ 60Hz on HDMI port
Dock Connectors	1x HDMI 2.0, 2x DisplayPort 1.4
Technical limitations	**Maximum resolution and display support is dependent on the maximum capability of the notebook.** **Highest resolution with dual displays is two 8K@ 60Hz host in High Resolution mode**. Three maximum displays supported are two 5K@ 30 Hz on DP ports plus one 4K UHD@ 30 Hz on HDMI in Multi-function mode The highest resolution for a non-Thunderbolt host in Multi-function mode is a single 5K dual cable (using both DP ports) + (1) 4K on HDMI port.
Docking station model #5	HP USB-C/A Universal Dock G2
Total number of supported displays (incl. the notebook display)	3
Max. resolutions supported	Multi-Function Mode: (3) 4K DCI @ 30Hz on any port High-Resolution Mode: (3) 4K DCI @ 30Hz on any port
Dock Connectors	1x HDMI 2.0, 2x DisplayPort 1.2
Technical limitations	**Maximum resolution and display support is dependent on the maximum capability of the notebook.** **The best resolution for dual or triple displays is 4K UHD@ 60Hz.** For use with the USB-A adapter that comes in the box the maximum number of displays supported is (2) 4k x 60 Hz on the Type-A Gen 1 connection from the host.

Options and Accessories (Sold separately and availability may vary by country)

Type	Description	Part Number
Adapter	HP USB-C to HDMI 2.0 Adapter	1WC36AA
	HP USB-C to RJ45 Adapter G2	4Z527AA
	HP USB 3.0 to Gigabit RJ45 Adapter G2	4Z7Z7AA
	HP USB-C to DisplayPort Adapter G2	8Y8Y1AA
	HP HDMI to VGA Adapter	H4F02AA
	HP USB-C to USB 3.0 Adapter	N2Z63AA
	HP USB-C to VGA Adapter	N9K76AA
	HP USB-C to DisplayPort Adapter	N9K78AA
Audio	HP BluetoothTM 365 Speaker	567D3AA
	HP USB G2 Stereo Headset	428K6AA
	HP 3.5mm G2 Stereo Headset	428K7AA
Cases	HP Prelude 15.6 Backpack	1E7D6AA
	HP Prelude 15.6 Top Load	1E7D7AA
	HP Prelude Pro Recycled 15.6 Backpack	1X644AA
	HP Prelude Pro Recycled 15.6 Top Load	1X645AA
	HP Renew Business 17.3 Laptop Backpack	3E2U5AA
	HP Renew Business 17.3 Laptop Bag	3E2U6AA
	HP Renew Business 14.1 Laptop Sleeve	3E2U7AA
	HP Renew Business 15.6 Laptop Bag	3E5F8AA
	HP Renew Business 14.1 Laptop Bag	3E5F9AA
	HP Prelude 15.6 Top Load	50P31AA
	HP Prelude 15.6 Backpack	50P32AA
	HP Renew Executive 16 Laptop Backpack	6B8Y1AA
	HP Renew Executive 16 Laptop Bag	6B8Y2AA
	HP Renew Executive 14.1 Laptop Sleeve	6B8Y3AA
	HP Travel 15.6 iron gray Laptop Backpack	6H2D8AA
	HP Travel 15.6 iron gray Laptop Backpack	6H2D9AA
Commodity	HP USB DVD-Writer External ODD	F2B56AA

Options and Accessories (Sold separately and availability may vary by country)

	HP Nano Keyed Cable Lock	1AJ39AA
	HP Nano Master Keyed Cable Lock	1AJ40AA
	HP Combination Nano Cable Lock	63B28AA
	HP Essential Combination Nano Cable Lock	63B31AA
	HP SureKey Standard/Nano/Wedge Cable Lock	6UW42AA
Docking	HP Thunderbolt 4 100W G6 Dock	9X472UT
	HP Thunderbolt 4 Ultra 180W G6 Dock	9X481UT
	HP Thunderbolt 4 Ultra 280W G6 Dock	AW5M5UT
	HP USB-C™ G2 Travel Dock	7PJ38AA
Hub	HP Universal USB-C Multiport Hub	50H55AA
	HP 4K USB-C Multiport Hub	6G843AA
	HP USB-C Travel Hub G3	86S97AA
	HP Universal USB-C Hub and Laptop Charger Combo	9H0H9AA
	HP USB-C to USB-A Hub	Z6A00AA
Keyboard/Combo	HP Wireless Rechargeable 950MK Mouse and Keyboard	3M165AA
	HP 655 Wireless Keyboard and Mouse Combo	4R009AA
	HP Wired Desktop 320MK Mouse and Keyboard	9SR36AA
	HP 975 Dual-Mode USB+Bluetooth Wireless Keyboard	3Z726AA
	HP 455 Programmable Wireless Keyboard	4R177AA
	HP 965 black Ergonomic Wireless Keyboard	7E756AA
	HP 475 Dual-Mode Wireless Keyboard	7N7B9AA
	HP 405 Multi-Device Backlit Wired Keyboard	7N7C1AA
	HP 435 Programmable Wireless Keypad	7N7C3AA
	HP 320K USB Wired Keyboard	9SR37AA
Mouse	HP Multi-Device Black 635 Wireless Mouse	1D0K2AA
	HP Creator Black 935 Wireless Mouse	1D0K8AA
	HP Premium Wireless Mouse	1JR31AA

Options and Accessories (Sold separately and availability may vary by country)

	HP 435 Multi-Device Wireless Mouse	3B4Q5AA
	HP 235 Slim Wireless Mouse	4E407AA
	HP 715 Rechargeable Multi-Device Bluetooth Mouse	6E6F0AA
	HP 925 Ergonomic Vertical Wireless Mouse	6H1A5AA
	HP Travel Bluetooth Mouse	6SP30AA
	HP 320M Wired Mouse	9VA80AA
Power	HP 65W LC USB-C AC power adapter	1P3K6AA
	HP 65W USB-C Laptop Charger	600Q8AA
	HP 65W USB-C Laptop Charger	671R3AA
	HP 110W USB-C Laptop Charger	8B3Y2AA
Video	HP USB-A 325 Webcam	53X27AA
	HP Streaming 965 Webcam	695J5AA
	HP 625 Webcam	6Y7L1AA

Change Log

Date of change:	Version History:		Description of change:
March 15, 2024	V1 to V2	Removed	Display Section
		Added	Battery Health Manager
		Removed	HP Smart Support Footnote
		Updated	HP Sure Recover Footnote
		Updated	HP Wolf Security Footnote
		Added	Battery Life
		Updated	Dimensions and Weight
April 23, 2024	V2 to V3	Updated	Battery Life
April 29, 2024	V3 to V4	Removed	Display Section
May 16, 2024	V4 to V5	Added	14.0 in WUXGA (1920 x 1200) Anti-Glare UWVA Low Blue Light sRGB 100 800 eDP 1.4+PSR+IOL Sure View 5 bent LCD Panel added.
June 6, 2024	V5 to V6	Updated	Weight and Dimensions Section
June 10, 2024	V6 to V7	Added	System unit Section
June 11, 2024	V7 to V8	Added	Display Section
June 18, 2024	V8 to V9	Added	Display Section
July 3, 2024	V9 to V10	Added	Display Section
July 9, 2024	V10 to V11	Added	Display Section
July 15, 2024	V11 to V12	Updated	Weight and Dimensions Section
September 3, 2024	V12 to V13	Removed	Display Section
September 5, 2024	V13 to V14	Updated	Display Section
September 16, 2024	V14 to V15	Added	Software and Security Section
October 9, 2024	V15 to V16	Updated	Update Port Specification to: Thunderbolt™ 4
October 23, 2024	V16 to V17	Added	Audio Section
November 12, 2024	V17 to V18	Added	USB Mapping Table
December 5, 2024	V14 to V15	Updated	UEFI version
January 31, 2025	V15 to V16	Updated	Callouts and Ports Section
February 18, 2025	V16 to V17	Updated	Power Section
May 20, 2025	V17 to V18	Updated	Docking Section
September 16, 2025	V18 to V19	Updated	Software and Security Section
December 18, 2025	V19 to V20	Updated	Graphics Section
November 17, 2026	V20 to V21	Updated	Software and Security Section

Change Log

© Copyright 2026 HP Development Company, L.P. The information contained herein is subject to change without notice. The only warranties for HP products and services are set forth in the express warranty statements accompanying such products and services. Nothing herein should be construed as constituting an additional warranty. HP shall not be liable for technical or editorial errors or omissions contained herein.

Intel, Core and Intel vPro are trademarks or registered trademarks of Intel Corporation or its subsidiaries in the United States and other countries. DisplayPort™ and the DisplayPort™ logo are trademarks owned by the Video Electronics Standards Association (VESA®) in the United States and other countries. USB Type-C® and USB-C® are trademarks of USB Implementers Forum. ENERGY STAR is a registered trademark of the U.S. Environmental Protection Agency. Microsoft and Windows are either registered trademarks or trademarks of Microsoft Corporation in the United States and/or other countries.